ITEM NO.	DRAWING NO.	TITLE	DESCRIPTION	QTY
1	14517	MANHOLE FRAME D400 DROP-IN	675 x 675 x 150	1
2	14518	MANHOLE COVER D400 DROP IN	675 x 675	2
3	13549	HEX BOLT	M12 x 40mm	2
4	N/A	NYLOC HEX NUT	M12	2

NOTES:

1. DEPTH OF INSERTION 80MM
2. SOLID FLANGES

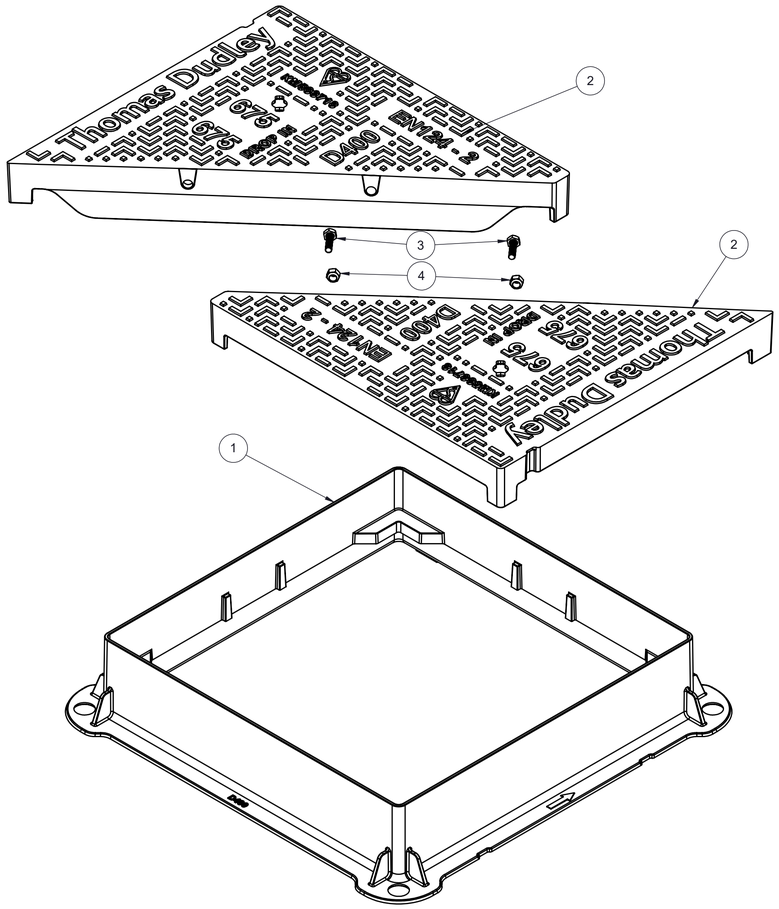

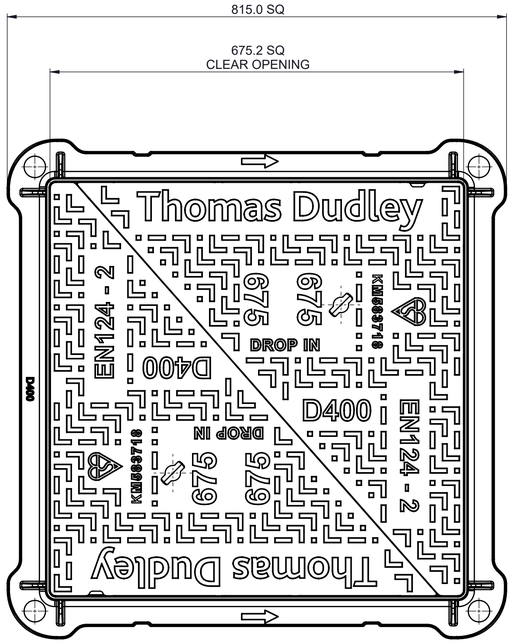

DROP IN COVERS TO BE CLOSE COUPLED AND REMOVED AS SHOWN BELOW

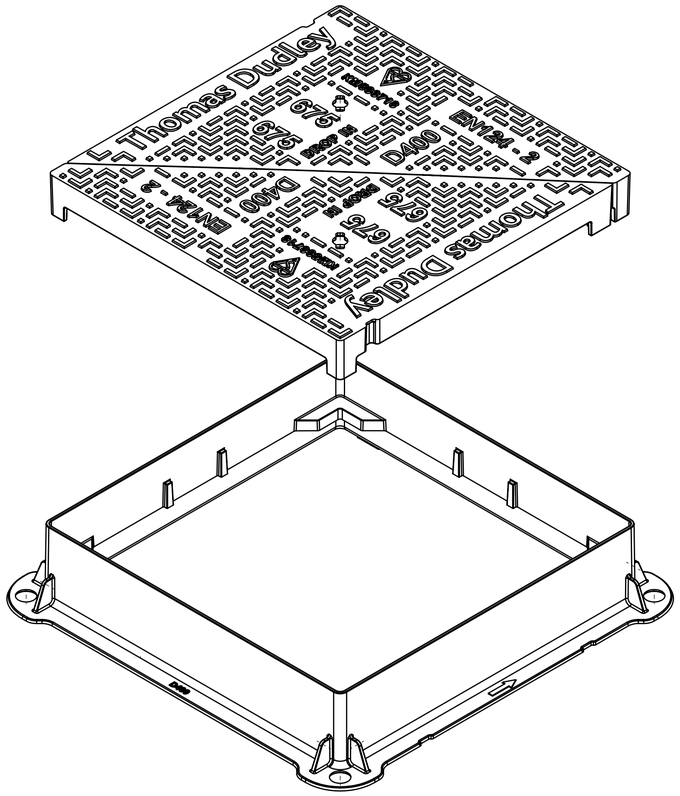

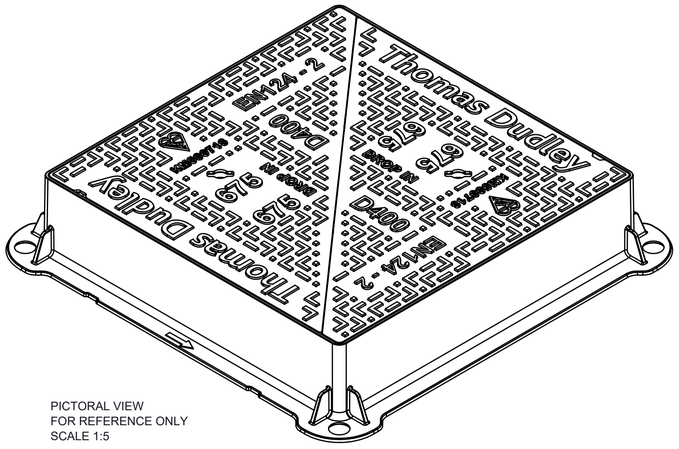

PICTORAL VIEW
FOR REFERENCE ONLY
SCALE 1:5

Thomas Dudley Ltd.
P.O.Box 28, Birmingham New Road
Dudley, West Midlands, DY1 4SN
Telephone: 0121 530 7000
www.thomasdudley.co.uk

This document and any design incorporated in it is the property of Thomas Dudley Ltd.
It is strictly confidential and must used only for the purpose for which it is supplied and expressly authorised.
Reproduction, manufacture or communication to third parties, in whole or part without prior written authorisation is strictly prohibited and is an infringement of Thomas Dudley Ltd's copyright and/or design right.
Other intellectual property rights may also subsist in any part of this document or design or invention incorporated within them.
Please contact Thomas Dudley Ltd for further information.

A1

DIMENSIONS IN mm
DO NOT SCALE

LINEAR TOLERANCE:
ISO8062-3:2007 TO CT-9
UNLESS SPECIFIED ON DRAWING

DRAWN	CHECKED	SHEET
C CORBETT	H MISTRY	TD Datasheet of 3
DATE	DATE	SCALE
26/07/2019	26/07/2019	1:5

PROJECT
TD UTILITY CASTINGS

DESCRIPTION
MANHOLE COVER AND FRAME ASSEMBLY
675x675x150 D400 DROP IN

DRG No.	ISSUE
14516	1